Sheet: Sheet5DEB9B6E

File: diyBMSv4-Leaf_pos.sch

Sheet: Sheet5DEB9BAA

File: diyBMSv4-Leaf_neg.sch

Sheet: Power and Comm

File: file5DF129FA.sch

Yoyodyne Consulting Inc

Sheet: /

File: diyBMSv4-Leaf.sch

Title: diyBMS-LEAF

Size: USLetter	Date: 2020-01-29	**Rev: 0.9**
KiCad E.D.A. kicad 5.1.5-52549c584ubuntu18.04.1		Id: 1/4

BMS for the +ve Leaf terminal

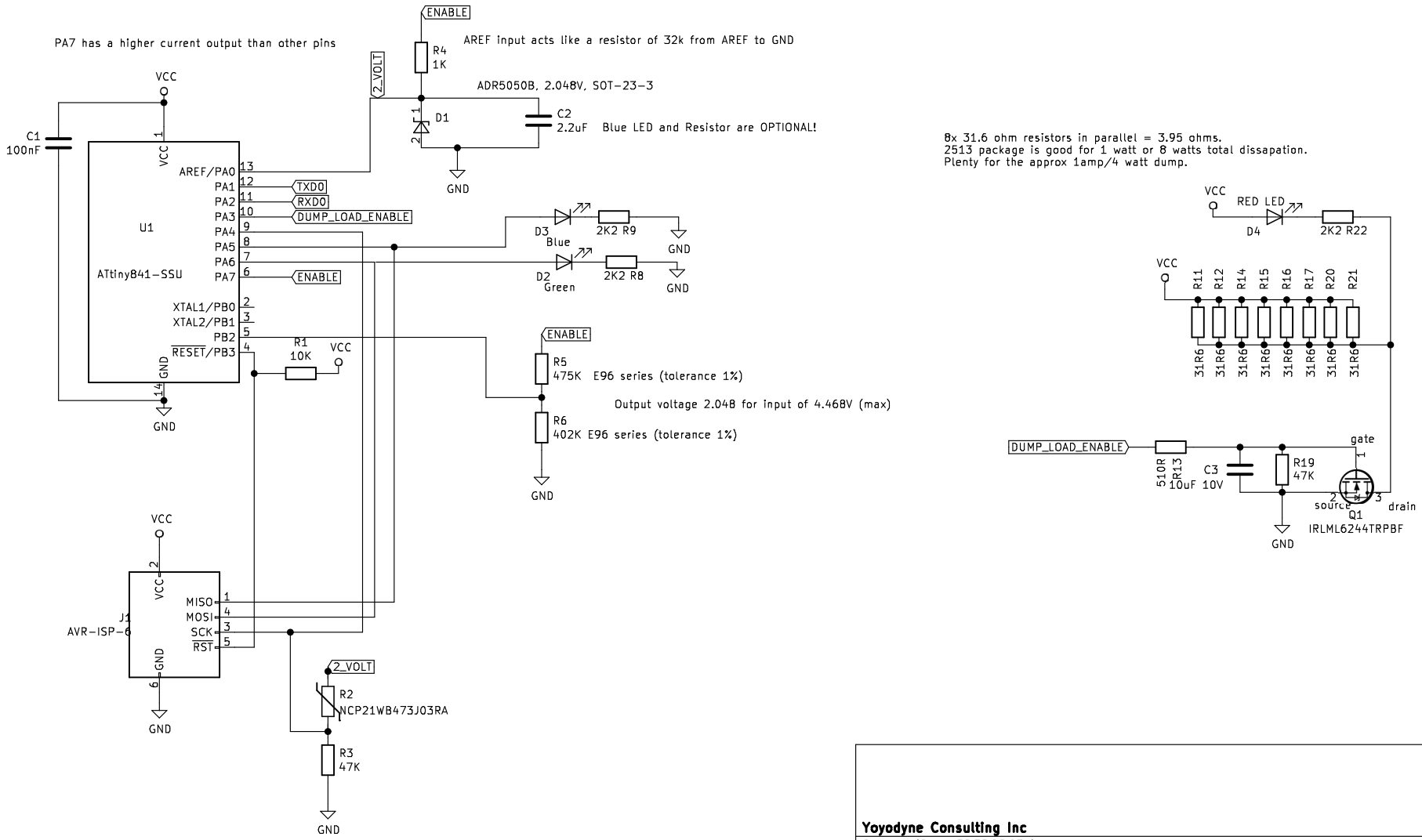

Yoyodyne Consulting Inc

Sheet: /Sheet5DEB9B6E/

File: diyBMSv4-Leaf_pos.sch

Title: diyBMS-LEAF

Size: USLetter	Date: 2020-01-29	Rev: 0.9
KiCad E.D.A. kicad 5.1.5-52549c584ubuntu18.04.1		Id: 2/4

BMS for the -vs Leaf terminal

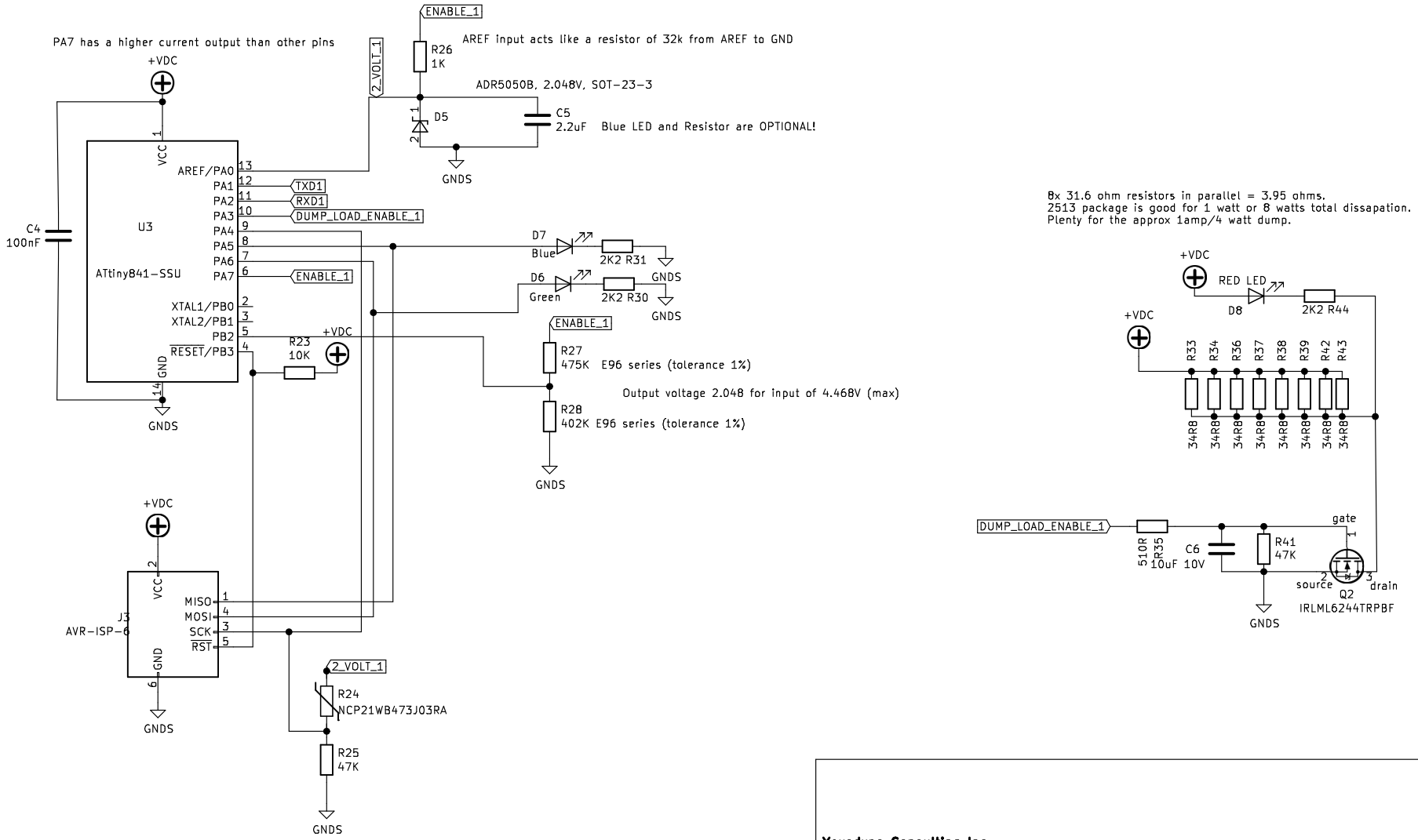

Yoyodyne Consulting Inc

Sheet: /Sheet5DEB9BAA/

File: diyBMSv4-Leaf_neg.sch

Title: diyBMS-LEAF

Size: USLetter	Date: 2020-01-29	**Rev: 0.9**
KiCad E.D.A. kicad 5.1.5-52549c584ubuntu18.04.1		Id: 3/4

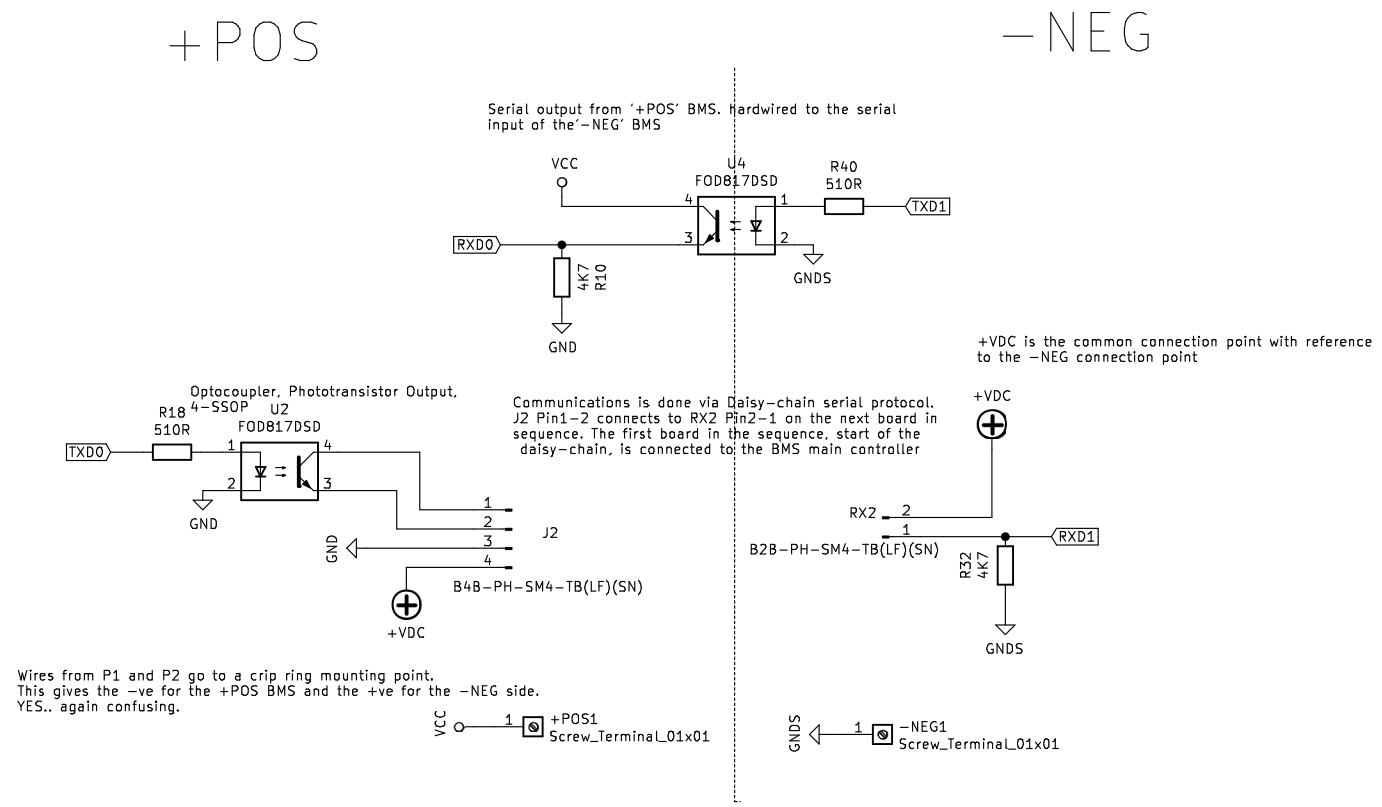

The Leaf cell is 2s2P with 3 connection terminals. +ve common −ve
Voltage on one pack is measured between the −ve terminal and common. The voltage on the second pack measures between he +ve terminal and common.
For schematic and layout purposes there are uniquely names VCC lines and GND lines for the separated BMS circuits.
YES... confusing

Each BMS is has its own supply:
+ve terminal − common (common is negative)
−ve terminal − common (common is positive)

Yoyodyne Consulting Inc

Sheet: /Power and Comm/
File: file5DF129FA.sch

Title: diyBMS−LEAF

Size: USLetter	Date: 2020−01−29	**Rev: 0.9**
KiCad E.D.A. kicad 5.1.5−52549c584ubuntu18.04.1		Id: 4/4